CHIN FONG

Large-size Mechanical Presses
and Automations for Carbody Panels Stamping.

大型機&多工位自動移送沖床

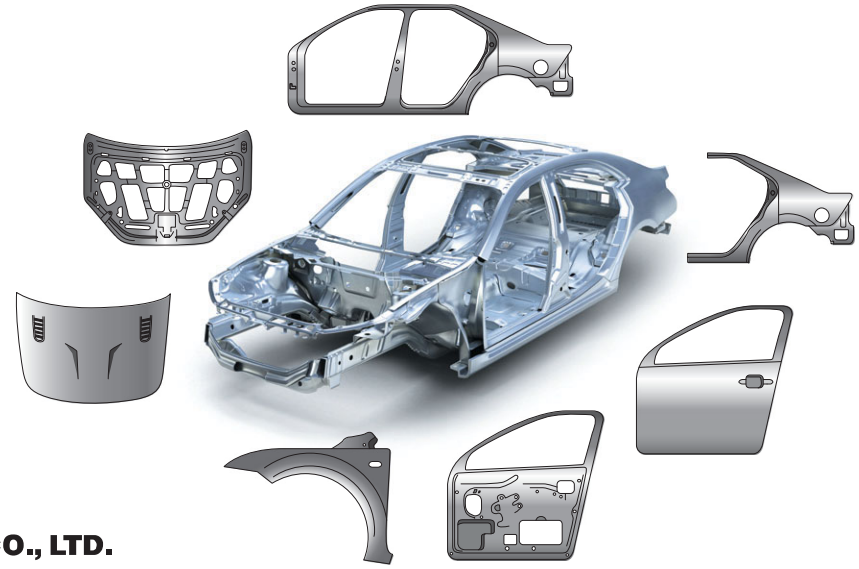

CHIN FONG MACHINE INDUSTRIAL CO., LTD.

Research and Development
研究與開發

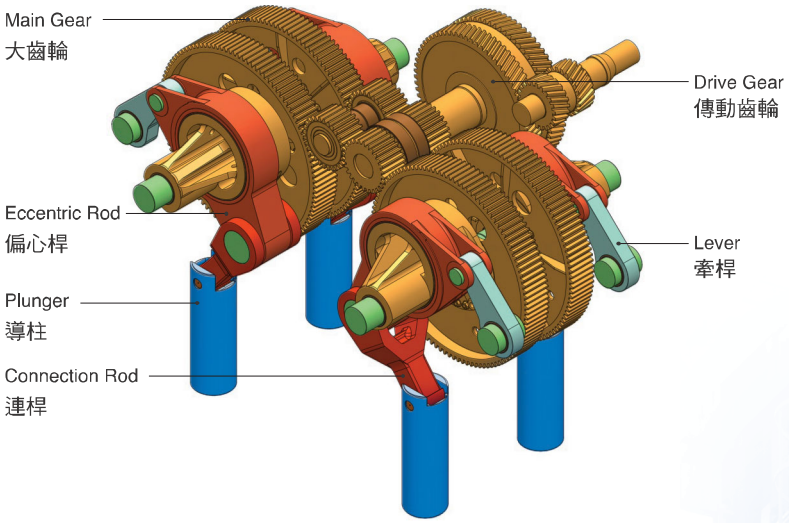

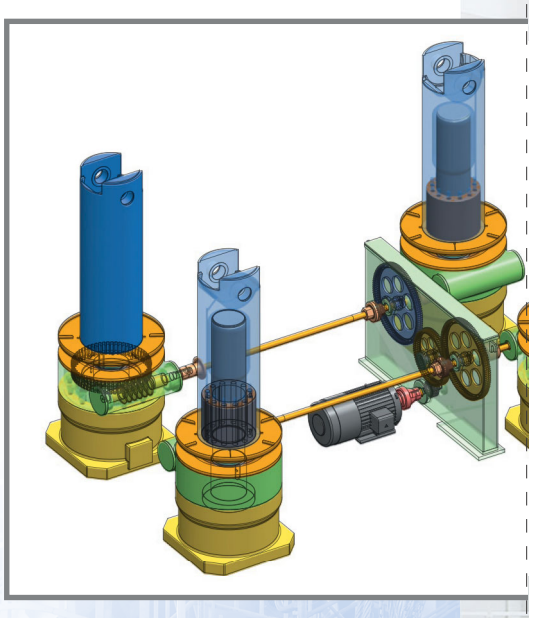

Link Drive Mechanism
連桿傳動機構

The Kinematics of 6 or 8 element Link Drive in Single Action Presses, offers many superior features over the traditional Eccentric Gear Drive. With the Chin Fong Link Drives, the slide velocity is reduced by approximately 30% during the working stroke producing better draws and higher part quality at increased production rates. In addition, lessening the impact of the dies on the material reduces vibration and noise which in turn generates longer die life and reduces the wear and tear on tooling and equipment.

單動沖床中，由6或8個連桿傳動組件提供動力，造就了許多優於傳統偏心齒輪傳動結構的特點。藉由金豐的連桿傳動設計，作功行程內的滑塊速度可降低約30%；並且在提高產能同時，能提供更好的引伸和工件品質。此外，減小模具對材料的衝擊，也可降低振動及噪音，進而延長模具使用壽命，並減少模具及設備的磨損。

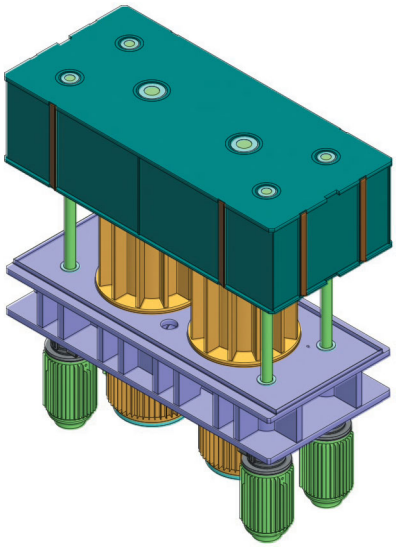

Chin Fong Die Cushions, with the State-Of-The-Art flow control system, delivers constant and controlled clamping pressure on the material during the forming /drawing operation resulting in higher part quality. The delayed return of the cushion offers better part control and increased productivity.

金豐模墊配備了高端氣流控制系統，在成型/引伸過程中提供了持續及穩定的材料夾持力，進而造就工件的高品質。模墊固鎖提供了較佳的工件控制及產能提升。

Innovative concept for manufacturing of automobi
汽車一體式車身鈑金的創新製造理念

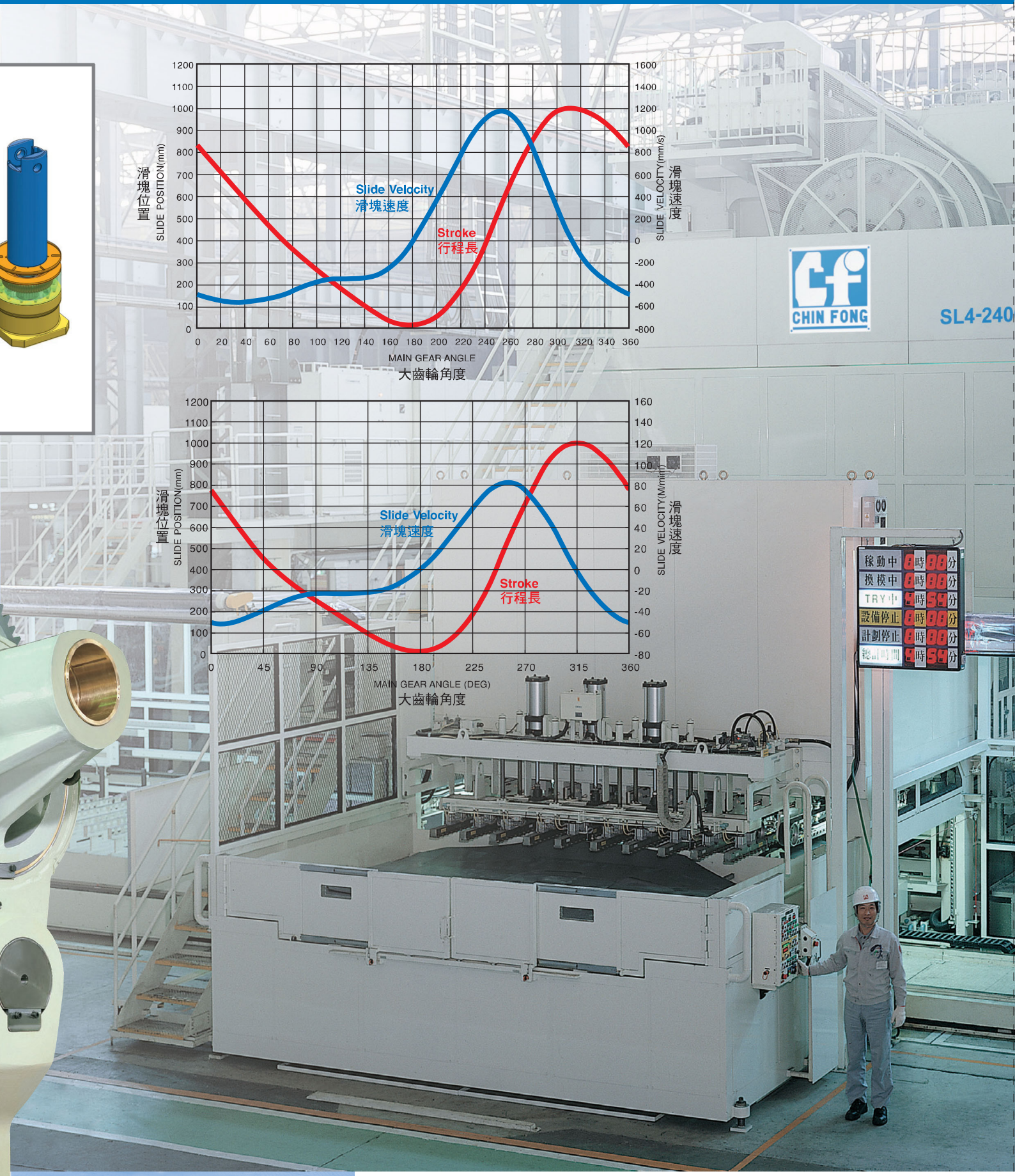

le one-piece side body panel

Mass Production of high quality Automotive One-Piece Body Panels has been elevated to a new level with Chin Fong State-Of-The-Art Automatic Tandem Press Lines. New Standards have been introduced with Chin Fong Tandem Press Line Technology. Shown is an installation consisting of De-Stacker Feeder, Washing & Centering Unit, Loader, Tandem Presses, Servo Driven Robots and End-of-Line Racking system, which has played a major role in economically improving the efficiency and flexibility of tandem press lines.

金豐的高端縱列式生產線讓高品質汽車整體車身鈑金的批量生產提升至新水平。
金豐縱列式生產線技術引入了新標竿。此圖為，包含了拆垛送料機，清洗機和置中裝置，伺服驅動機械手，放入機械手，末端收料系統，這些設備扮演了改善效能的重要腳色，並提高了縱列式生產線的可塑性。

AO Class Tandem Press Stamping Line
AO級生產線

Advanced Press Automation Control Technologies
自動化控制技術

The use of Cutting-Edge Press Control Technology has significantly elevated Stamping Efficiency and Part Quality.

使用高端沖床控制技術顯著提高了沖壓效率和工件品質

Between Press Servo-Driven Robots and Loader/Unloaders, has set new standards in tandem line part transfer.
Accurate positioning at higher speeds has brought the Automated Tandem Line Concept back to the Front-Of-The-Class.

伺服驅動機械手介於沖床及大型鈑金移送裝置；
為自動化縱列沖床線的工件移送新標準。
高速精準定位系統將自動化縱列沖床生產線帶到頂尖技術地位。

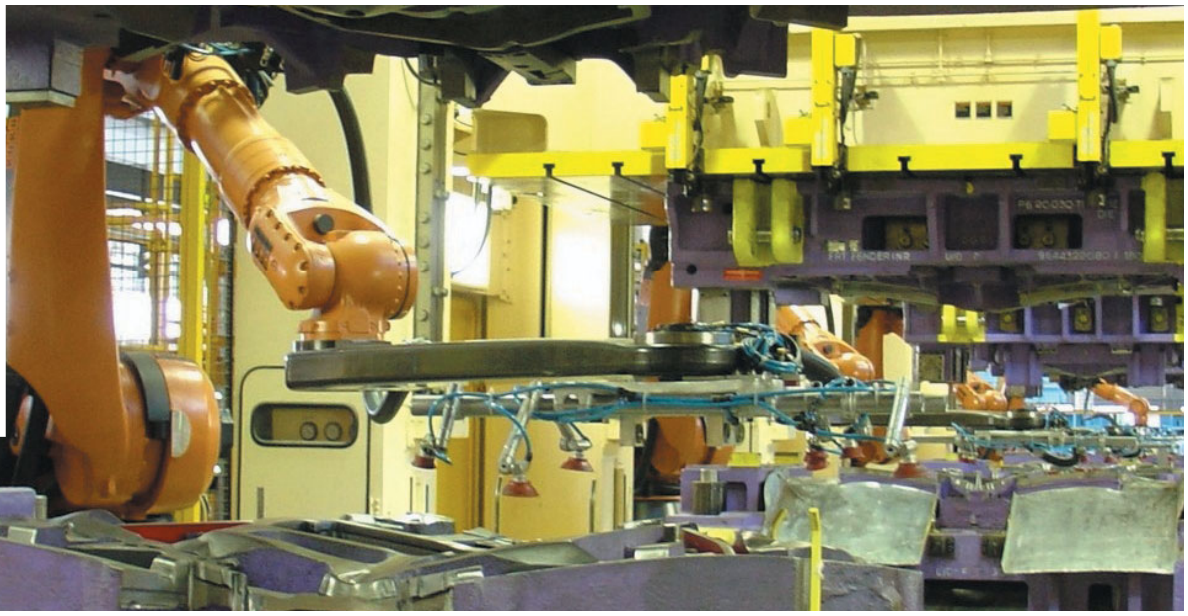

Chin Fong Modern Manufacturing Facilities
金豐最新生產製造設備

Manufacturing Capabilities:
- **Gear Hobbing**
- **Precision Tooth Profile Grinding**
- **Modern Welding Facilities**
- **Latest Testing Equipment**

產能：
- **齒輪滾齒**
- **精密齒輪研磨機**
- **最新焊接設備**
- **最新檢測設備**

Precision Tooth Profile Grinding
2800mm Diameter Gear
精密齒輪研磨機
齒輪直徑2800mm

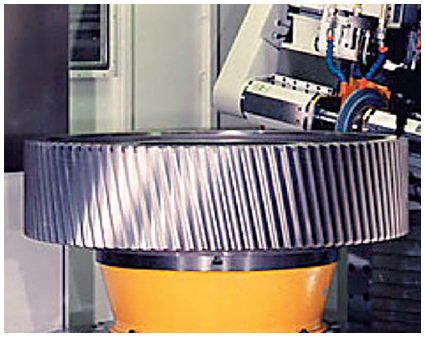

Helical Gear Griding
斜齒輪研磨機

Trained Assembly Personnel
良好受訓的裝配人員

Double Helical Gear Shaper
3000mm Diameter Gear
人字齒輪成形機
齒輪直徑 3000mm

Modern Weld Facilities
最新焊接設備

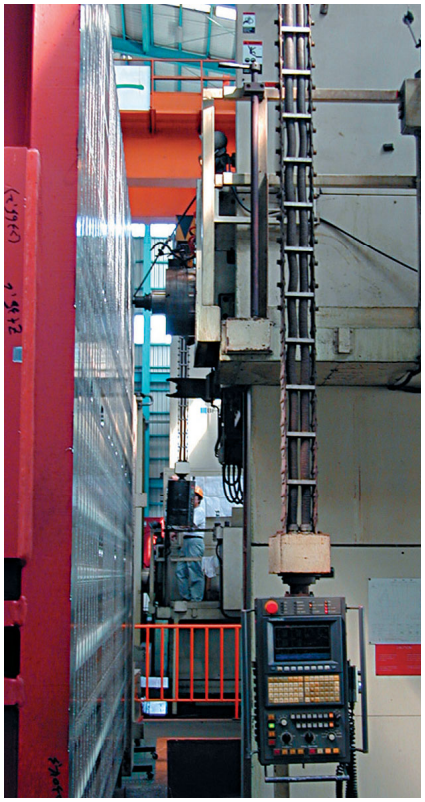

CNC Floor-Type Milling Machine Centers
180mm Spindle
CNC落地式搪銑床
主軸直徑180mm

Coordinate Measuring Machine
X: 1200mm Y: 2400mm Z: 1000mm
三次元量測儀
X軸: 1200mm Y軸: 2400 mm Z軸: 1000mm

List of supply record worldwide
全球供應案例

Successful installation of Chin Fong Presses worldwide
金豐沖床全球成功案例

Tryout Press
試模機
SL4-2400

Transfer Press
多工位移送生產線
SE4T-2000

Coil Line
自動送料生產線
S4-800

Transfer Press
多工位移送生產線
SL2-1000

Blank Line
自動下料生產線
S4-800

Tandem Press Line for Automotive Industry
縱列式汽車板金沖壓生產線
SL4-2400x1+S4-1000x4

Transfer Press
多工位移送生產線
SE2T-1000

Tandem Press Line for Automotive Industry
縱列式汽車板金沖壓生產線
SL4-1000x1+S2-600x3

Tandem Press Line for Automotive Industry
縱列式汽車板金沖壓生產線
SL4-1600x1+S4-1000x3

沖壓機械專業製造廠

INNOVATION, SERVICE, COMMITMENT

金豐機器工業股份有限公司
CHIN FONG MACHINE INDUSTRIAL CO., LTD.

HEAD OFFICE & FACTORY:
總公司: 台灣省彰化市彰水路186號
186 Chang Shui Road, Chang Hua, Taiwan
http: //www.chinfong.com.tw
E-mail: sales@chinfong.com.tw
TEL: +886-4-752-4131
FAX: +886-4-761-1920, 761-2814

北區營業所 **TAIPEI OFFICE**
TEL: +886-3-435-5058
FAX: +886-3-463-9648

南區營業所 **KAOHSIUNG OFFICE**
TEL: +886-7-238-5689~90
FAX: +886-7-238-5691

OVERSEAS BRANCHES
金豐（中國）機械工業有限公司
CHIN FONG (CHINA) MACHINE INDUSTRIAL CO., LTD.
寧波市鎮海經濟開發區金豐路3號
3 Chin Fong Road, Zhenhai Economic Development Zone, Ningbo, China
TEL: +86-574-8630-1222
FAX: +86-574-8630-3709
http: //www.chinfong.com.cn
E-mail: ge0107@chinfong.cn

STAMTEC
U.S.A.: STAMTEC INC.
4160 Hillsboro Highway Manchester, TN 37355, U.S.A.
TEL: +1-931-393-5050
FAX: +1-931-393-5060
http: //www.stamtec.com
E-mail: Salse@stamtec.com

THAILAND: CHIN FONG (THAILAND) CO., LTD.
E-mail: chinfong@chinfong.co.th
TEL: +66-2-919-6820~2 FAX: +66-2-919-6823

INDONESIA: PT. CHIN FONG INDONESIA
E-mail: info@chinfong.co.id
TEL: +62-21-450-7422 FAX: +62-21-458-44197

MALAYSIA: CHIN FONG MACHINE (M) SDN BHD
E-mail: chinfongmachine@gmail.com
TEL: +60-3-38853155

The contents disclosed in this catalogue, including pictures, data, wordings & drawings, are exclusive property of Chin Fong Machine Industrial Co., Ltd. Unauthorized duplication or use part or whole of this catalogue is prohibited. Chin Fong reserves rights to modify the specifications & features, due to product improvements, without further notification. optional accessories showing on this picture are for reference only.
以上資料及圖片均屬本公司之產權，不得抄襲仿冒。且本公司得因產品之改良逕行設計變更，不另行通知。
照片內之實物屬選用配備，僅供參考。

1706.CE01.3000 AC Design / 04-27071159